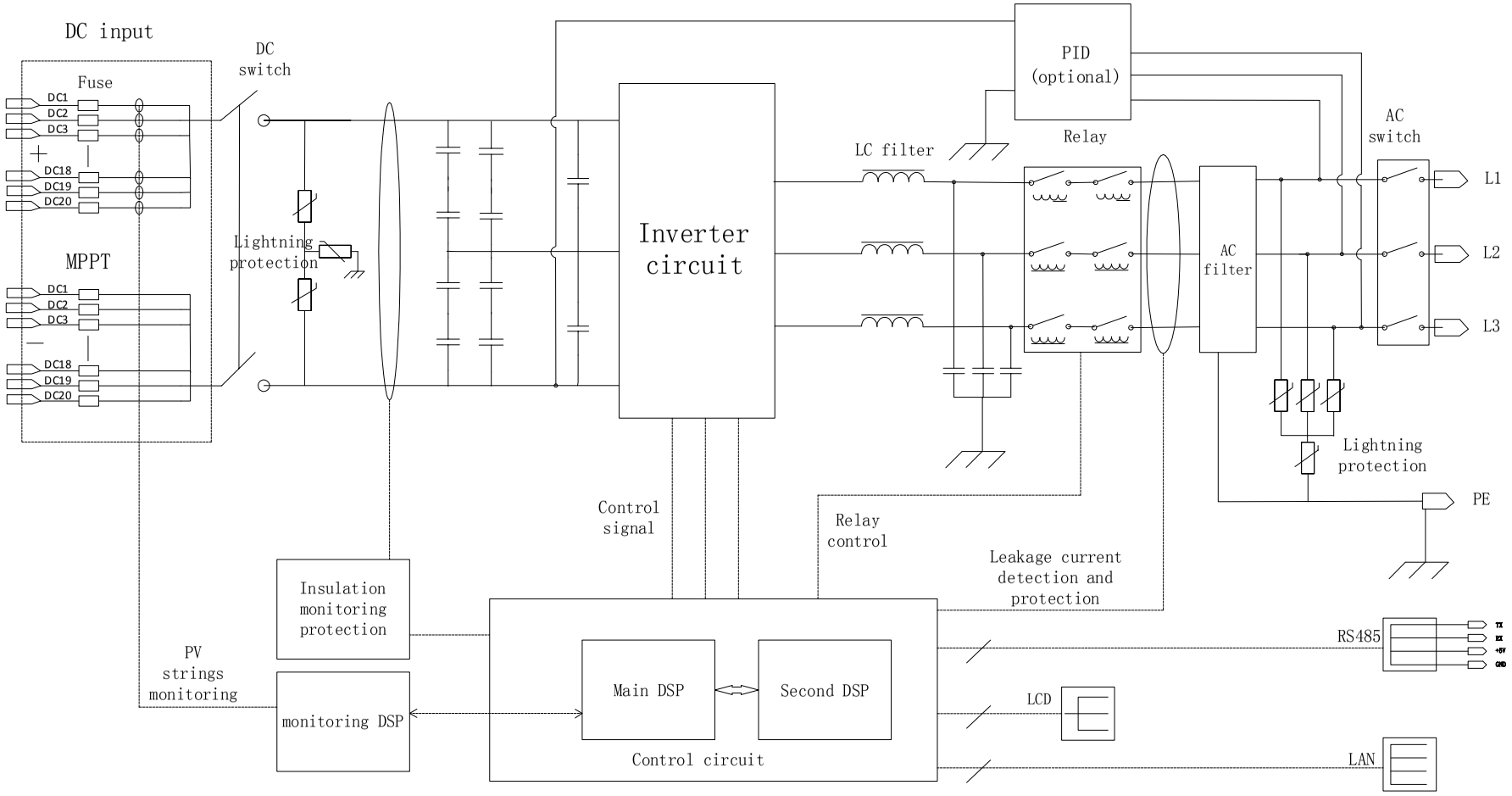

Draw		Date		Drawing Name	Model	solis
Review		Date		Topology	Solis-125K-EHV-5G	Ginlong Technologies Co.,Ltd.
Approve		Date				